ANDON
INTERCONNECTION SPECIALISTS

SERIES 406 DIP SOCKET: POLYIMIDE WITH STANDOFF
407 DIP SOCKET: POLYIMIDE WITHOUT STANDOFF

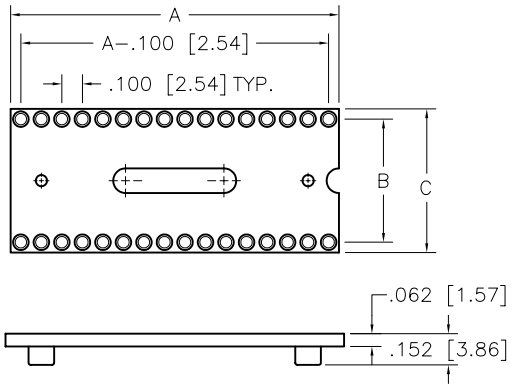

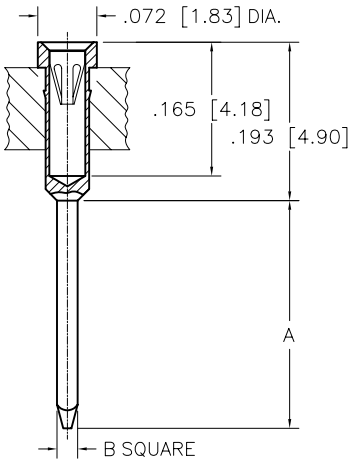

FIG. C

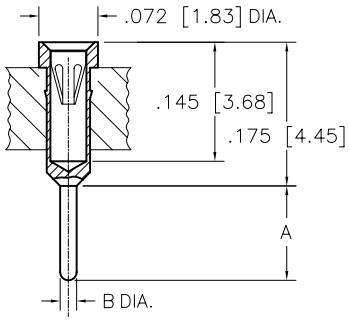

FIG. D

WAFER CHART				
PIN	DIM "A"	DIM "B"	DIM "C"	
6	.300 [7.62]	.300 [7.62]	.400 [10.16]	306
8	.400 [10.16]			308
10	.500 [12.70]			310
14	.700 [17.78]			314
16	.800 [20.32]			316
18	.900 [22.86]			318
20	1.000 [25.40]			320
22	1.100 [27.94]			322
24	1.200 [30.48]			324
28	1.400 [35.56]			328
24	1.200 [30.48]	.600 [15.24]	.700 [17.78]	624
28	1.400 [35.56]			628
30	1.500 [38.10]			630
32	1.600 [40.64]			632
36	1.800 [45.72]			636
40	2.000 [50.80]			640
48	2.400 [60.96]			648
24	1.200 [30.48]	.900 [22.86]	1.000 [25.40]	924
28	1.400 [35.56]			928
32	1.600 [40.64]			932
50	2.500 [63.05]			950
52	2.600 [66.04]			952
64	3.200 [81.28]			964

NOTE:
6, 8, AND 10 PIN SOCKETS
DO NOT HAVE A WINDOW

TERMINAL STYLE			
TERMINAL	FIG.	DIM "A"	DIM "B"
–01	D	.115 [2.92]	.020 [0.51]
–03	C	.510 [12.95]	.025 [0.64]
–08	D	.170 [4.31]	.020 [0.51]
–09	D	.280 [7.11]	.020 [0.51]
–94	D	.125 [3.17]	.018 [0.46]

CONTACT TYPE

S: STANDARD DIP	INSERTION FORCE WITHDRAWAL FORCE	9.0 oz. AVG. 2.0 oz. MIN.
M: STANDARD PGA	INSERTION FORCE WITHDRAWAL FORCE	1.6 oz. MAX. 0.5 oz. MIN.
L: INTERSTITIAL PGA	INSERTION FORCE WITHDRAWAL FORCE	1.0 oz. MAX. 0.3 oz. MIN.
H: HIGH FORCE	INSERTION FORCE WITHDRAWAL FORCE	18.3 oz. MAX. 4.2 oz. MIN.
N: BeNi MATERIAL	INSERTION FORCE WITHDRAWAL FORCE	6.70 oz. MAX. 5.29 oz. MIN.

TECHNICAL SPECIFICATIONS

MATERIAL

INSULATOR	BROWN POLYIMIDE UL 94V–0 LISTED
TERMINAL	BRASS PER ASTM–B16
CONTACT	BeCu PER ASTM–B194
OPERATING TEMP.	–65°C TO +240°C

CONTACT FORCES

INSERTION	STANDARD	9 oz. AVG.
WITHDRAWAL	STANDARD	2 oz. MIN.

ORDERING INFORMATION

40X–XXX–XXX–PXX–H10

SERIES
406: WITH STANDOFF
407: WITHOUT STANDOFF

DIP – SPACING
NO. OF PINS

TERMINAL STYLE
FOR OPTIONAL TERMINAL STYLES
SEE TERMINAL STYLES

CONTACT TYPE

LOGO

INSULATOR MATERIAL
OTHER MATERIALS AVAILABLE
CONSULT FACTORY

PLATING: TERMINAL CONTACT
P30: GOLD / GOLD
P31: TIN–LEAD / GOLD
P32: TIN–LEAD / TIN
OTHER PLATINGS AVAILABLE
SEE OPTIONAL PLATINGS

©ANDON 2007 DIMENSIONS ARE SHOWN IN INCHES [MILLIMETERS]. WE RESERVE THE RIGHT TO CHANGE SPECIFICATIONS WITHOUT NOTICE.

ANDON ELECTRONICS CORPORATION
4 COURT DRIVE, LINCOLN, R.I. 02865, USA
TEL. (401) 333–0388 / FAX (401) 333–0287
E–MAIL: info@andonelect.com
WEB SITE: http://www.andonelect.com